DATA SHEET
DOOR DETECTOR 03.G5.M65.194.FED.230

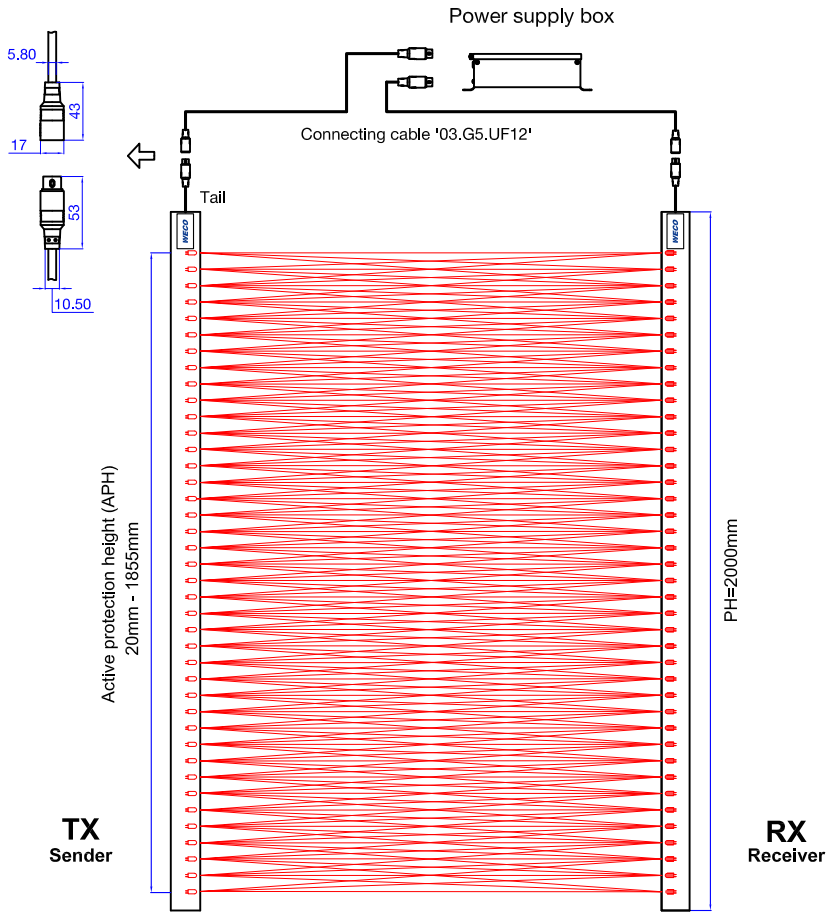

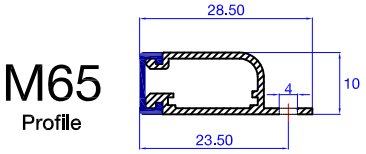

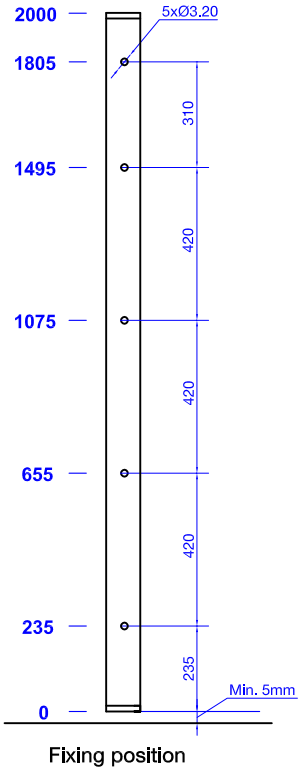

Max. number of beams		194	
Diodes		40	
Effective detecting dist.		0mm - 4000mm	
Lowest beam (APH)		20mm	
Uppermost beam (APH)		1855mm	
Dist. between diodes		47.50mm	
Response time		100ms	
Light immunity		Sunlight immune	
Profile height (PH)		2000mm	
Profile material		Aluminium	
Protection rating		IP54	
Operating temperature		-20°C to +65°C	
Alignment tolerance		Vertical: +/- 15mm (7°)	
		Horizontal: +/- 3mm (5°)	
LEDs in receiver	Yellow	Power indicator	
	Red	☼	Beams interrupted or system fault
		●	Normal

Signal output		Relay contact: 1 NO & 1 NC	
Power consumption		<=4w	
Power supply voltage		220 VAC +/- 15%, 50/60Hz	
LEDs in PWS	Green	Power indicator	
	Red	☼	Beams interrupted or system fault
		●	Normal
Internal wiring	Red	+	
	Black	-	
	Yellow	Sychro	
	Green	Output	
Norms		EN 81-20 & EN 81-70	
EMV - Emission		EN 12015	
EMV - Immunity		EN 12016	
QMS		ISO9001	
EMS		ISO14001	

info@wecoglobal.com

Doc. Nr.	03.G5.M65.194.FED.230	Date	02.NOV.2016
Control	E317511F-DJ		